AMERICAN

DIESELECTRIC ® TRADEMARK
LOCOMOTIVE CRANES

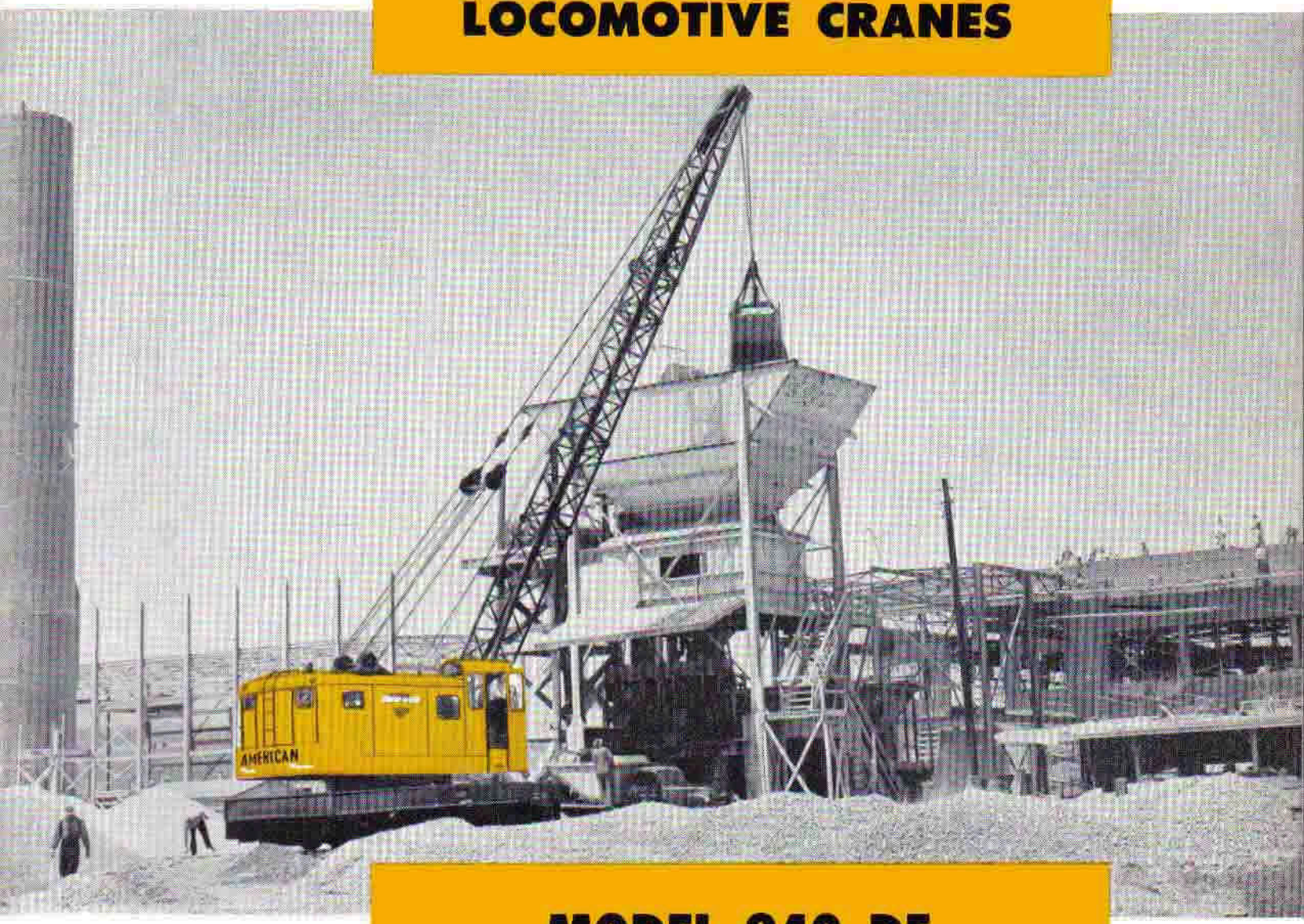

MODEL 840 DE
40-50 Ton Capacity

MODEL 850 DE
50-80 Ton Capacity

SMOOTHEST POWER ON THE RAILS

CATALOG
NO. 600-L-4G(a)

AMERICAN

DIESELECTRIC ® TRADEMARK

LOCOMOTIVE CRANES

DIESEL POWER
TO THE DECK

ELECTRIC POWER
TO THE TRUCKS

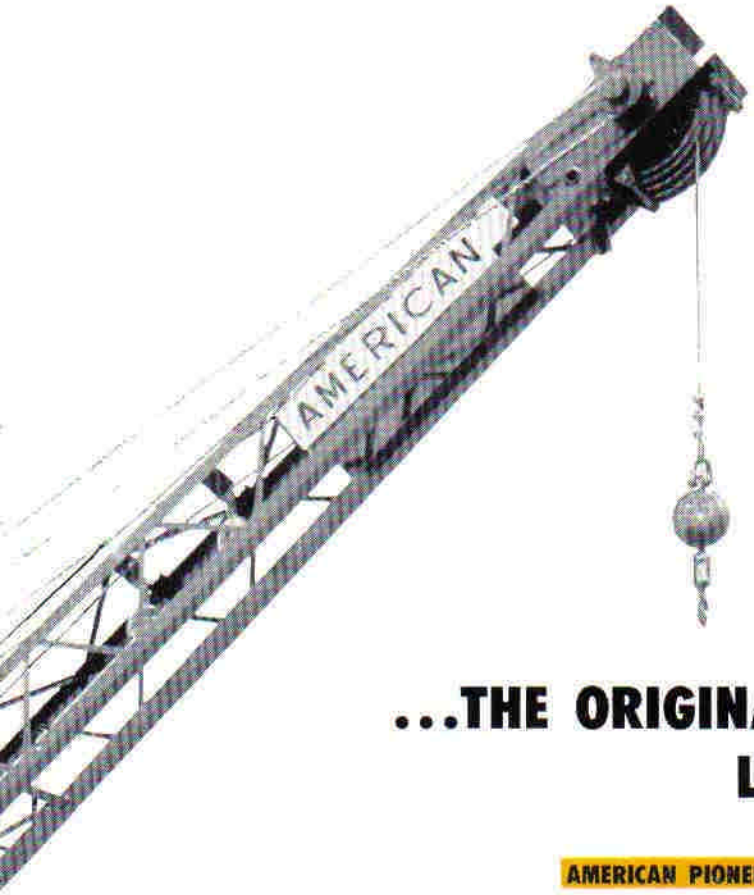

...THE ORIGINAL DIESEL ELECTRIC LOCOMOTIVE CRANE

AMERICAN PIONEERED—American Hoist pioneered the application of electric power to the trucks, direct diesel power to the deck machinery and boom. AMERICAN planned, developed, fully perfected and patented the super-smooth, ultra-efficient DiesELectric system . . . the greatest advance in locomotive crane design yet achieved.

WRITES OFF ITS OWN COST—Records show the American DiesELectric Locomotive Crane has written off its own cost in as little as five years. Few indeed are the capital investments that can offer such return.

MORE OUTSTANDING FEATURES—More outstanding features are available in the American DiesELectric than any crane on the market. Features that provide ease of control, speed and smoothness . . . Features that keep service at a minimum and production at its highest.

REPUTATION FOR QUALITY AND SERVICE—For more than eighty years, American Hoist has built its reputation on a policy of providing highest quality and service . . . and intends to continue that policy. You as an American owner are assured of complete dependability . . . in machine performance and ultimately in service.

Your machine, regardless of age, will get the same careful consideration and attention as the day it was delivered!

For any desired operating data, drawings, performance or other material not shown in this catalog, you are invited to write . . .

AMERICAN HOIST & DERRICK COMPANY
St. Paul, Minnesota 55107

DIESELECTRIC LOCOMOTIVE CRANE U. S. PATENT NO. 2083460, CANADIAN PATENT NO. 368226 AND TOUCH CONTROL U. S. PATENT NO. 2370856 GRANTED TO AMERICAN HOIST & DERRICK CO.

. . . THE BIG NAME IN DIESELECTRIC® LOCOMOTIVE CRANES

TROUBLE FREE TRUCKS

DIESELECTRIC® TRADEMARK

. . . EACH TRUCK IS AN INDIVIDUAL SELF-CONTAINED POWER UNIT!

BOLSTER

Cast steel bolster is supported on heavy duty springs in side frames . . . special low design of bolster reduces roll and wear . . . eliminates the possibility of trouble.

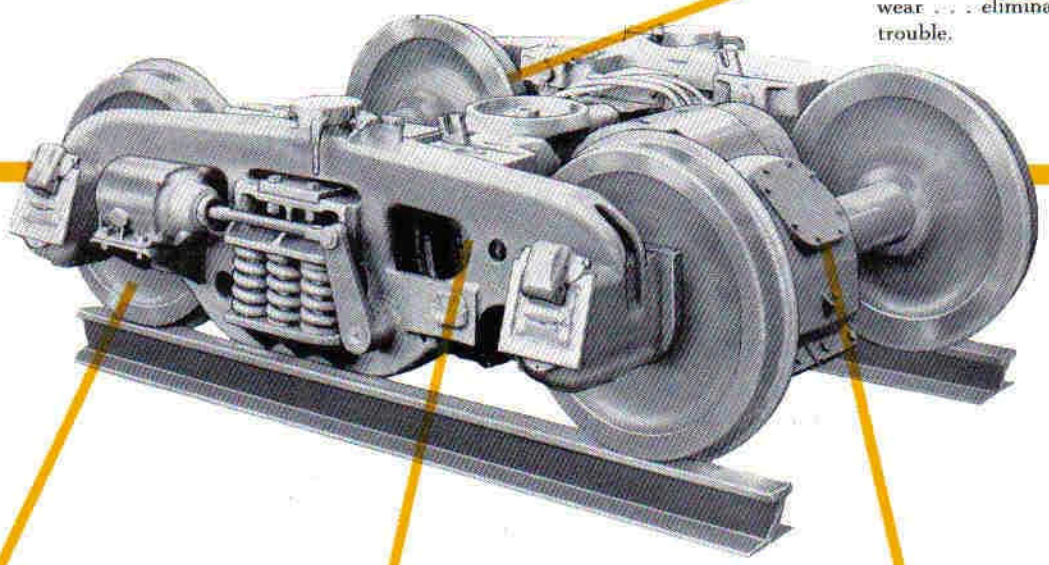

WHEELS AND AXLES

Rolled steel multi-wear wheels meet AAR standards, can be turned down to new wearing surface if necessary. Wheels are press fit on forged steel axles. Journal end and wheel seat of axles are machined for accurate fit.

SIDE FRAMES

Strong, heavy alloy steel castings with integral journal boxes, specially designed and manufactured by American Hoist for locomotive crane service. Journal boxes are AAR standard and house the pad lubrication. Roller bearings are optional. These side frames are not modified freight car frames.

DRIVE

The triple reduction drive between motor and axle gear is enclosed in an oil tight case . . . transmission is built around the axle with the motor end suspended from the bolster on a shock absorbing hanger. Intermediate shafts in the drive are mounted on anti-friction bearings. Steel spur gears are machine cut for perfect mesh and heat-treated for long life.

. . . Specially designed trucks for Locomotive Crane service

American Locomotive Crane trucks are designed from end to end for Locomotive Cranes service . . . The longest wheel base in the industry . . . 6' 8" from center to center of axles . . . provides better load distribution and greater stability . . . reduces flange wear on turns . . . provides more room for mounting traction equipment and easy access for inspection and service.

Each truck is an individual power unit driven by a heavy duty electric traction motor . . . the same system that has powered diesel electric lomocotives hundreds of millions of miles. The DiesELectric system has the flexibility of steam plus the economy of diesel operation, and its extreme simplicity is insurance against trouble.

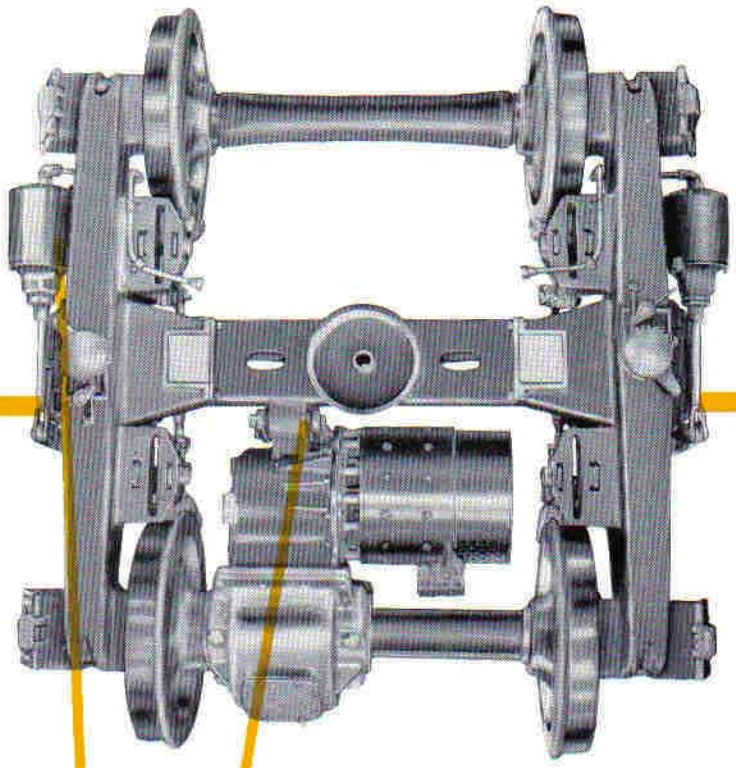

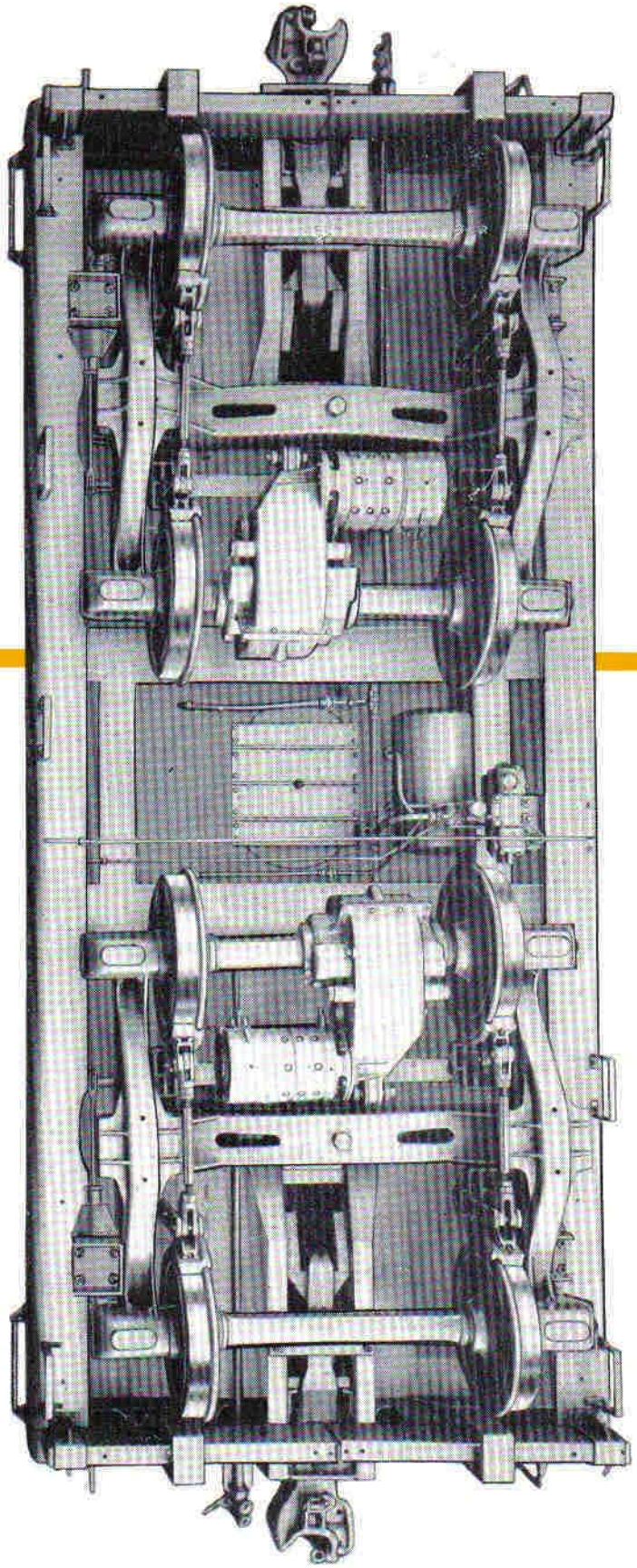

BRAKES

Four large air brake cylinders, two mounted on each truck, provide positive braking power. Each cylinder actuates brakes for the two wheels located on its side of the truck—in effect each pair of wheels and cylinder is an independent brake system . . . the four systems equalized through air pressure . . . you get more braking power for safer, smoother stops!

MOTOR SUSPENSION

The traction motor is flange-mounted to the transmission case, assuring perfect alignment with the transmission gear train. Motor and transmission case are suspended from the bolster on a shock absorbing hanger. Large oil proof rubber bushing in the hanger assembly absorbs shock in all directions . . . lets the motor and drive ride smoothly.

SHIFTER FOR "IN TRAIN" TRANSIT

Disengaging the traction motor for "in train" travel takes only minutes. A few turns on the shifter wrench takes the motor out of gear. Long distances at high speed can be traveled without danger of "burning out" the traction motor. (Standard equipment.)

SMOOTHEST POWER ON RAILS!

WELDED CARBODY
...for greatest strength

AMERICAN single unit welded design gives you a solid crane base to withstand the most punishing work . . . Heavy rolled steel I-beams are joined to form a rigid full length box section, reinforced by center members. Top side is completely covered with heavy steel plate welded in place.

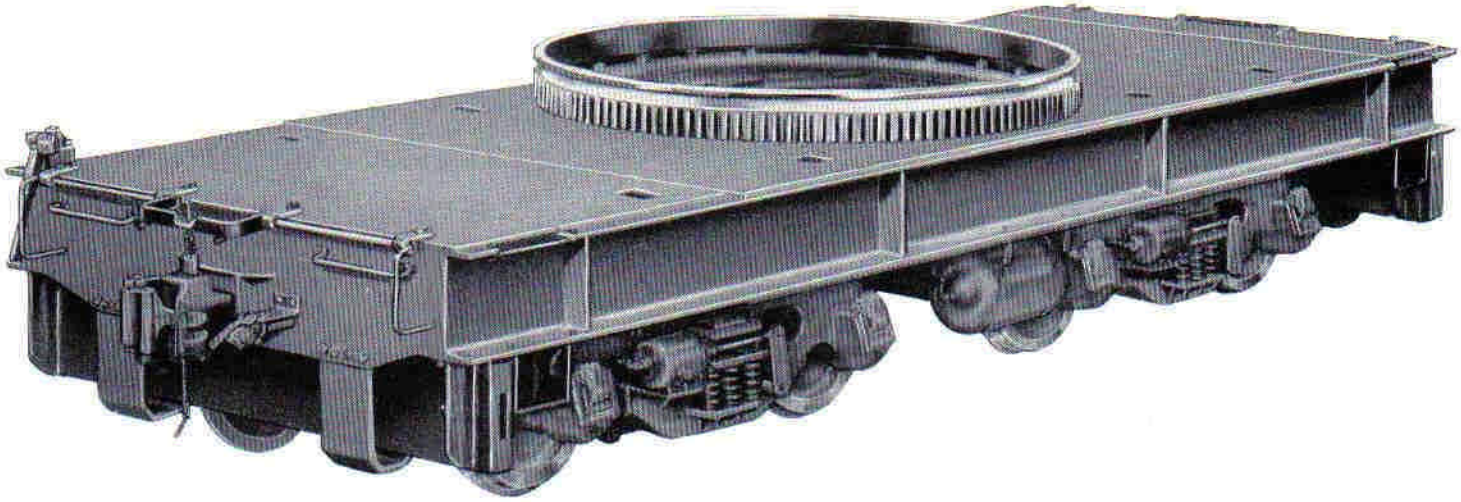

Combination bullgear and roller path is bolted to the carbody. The bottom of bullgear as well as the carbody surface to which it is attached are machined for perfect alignment.

End mounted outriggers are strong welded box-sections. One man can easily slide them out to working position . . . are locked in retract position when not in use.

Hand brake lever is mounted at the end of carbody. Couplers are TYPE E (6¼" x 8") AAR approved, with pin levers located at each corner. Standard AAR steps and hand grabs are included.

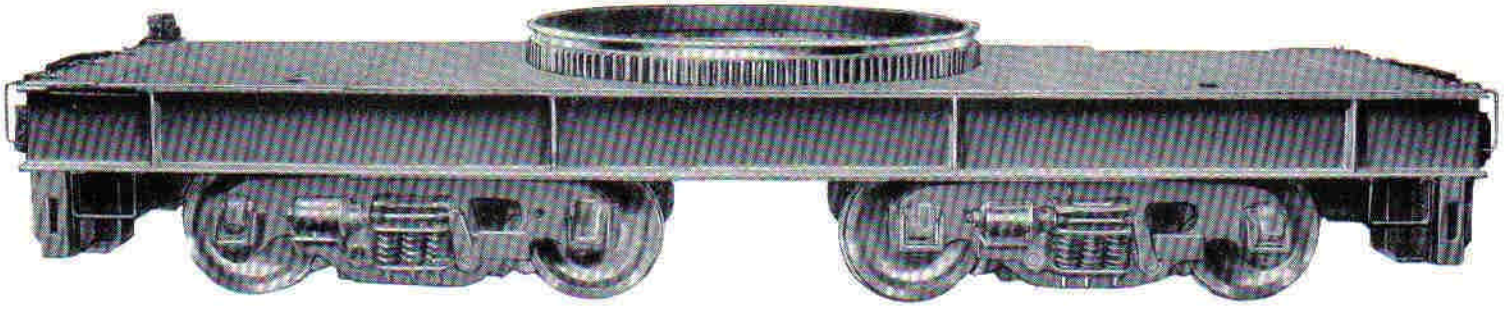

INTERLOCKING GIB RING

Eliminates king pin . . . upper deck turns on a true roller bearing

The American gib ring system eliminates the king pin . . . It provides full 9' diameter bearing circle which absorbs the shock and strain of crane work . . . makes this one of the strongest points in AMERICAN . . . proved in over half a century of field service.

BULL GEAR AND ROLLER PATH is a single, heavy steel casting, 9' in diameter. Teeth are machine cut for precision mesh . . . smoothest swing and minimum maintenance. Lower roller path is integrally cast with bullgear . . . upper roller path is bolted to the deck with a shear ring welded to deck, which reduces shear loading on bolts.

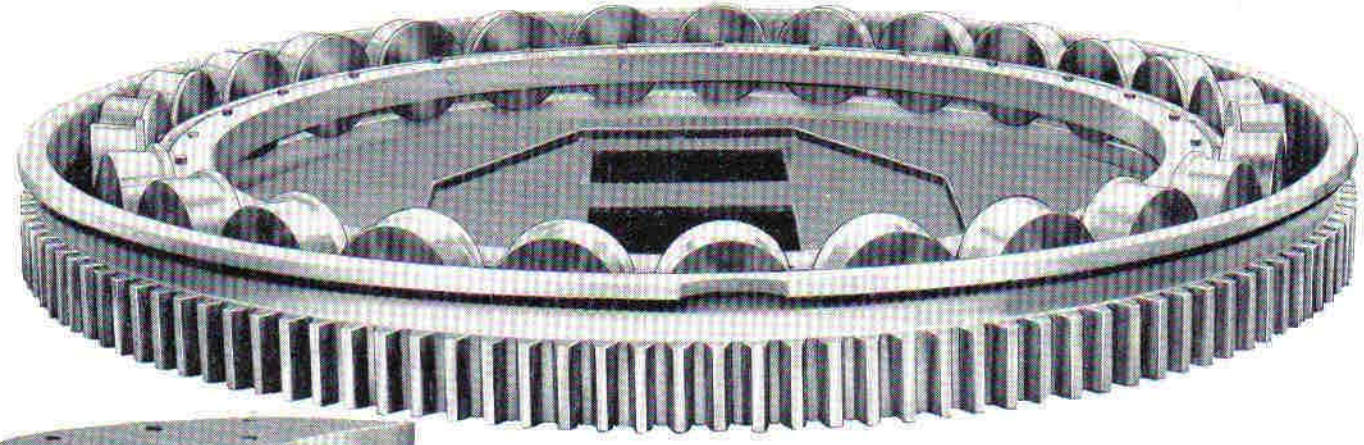

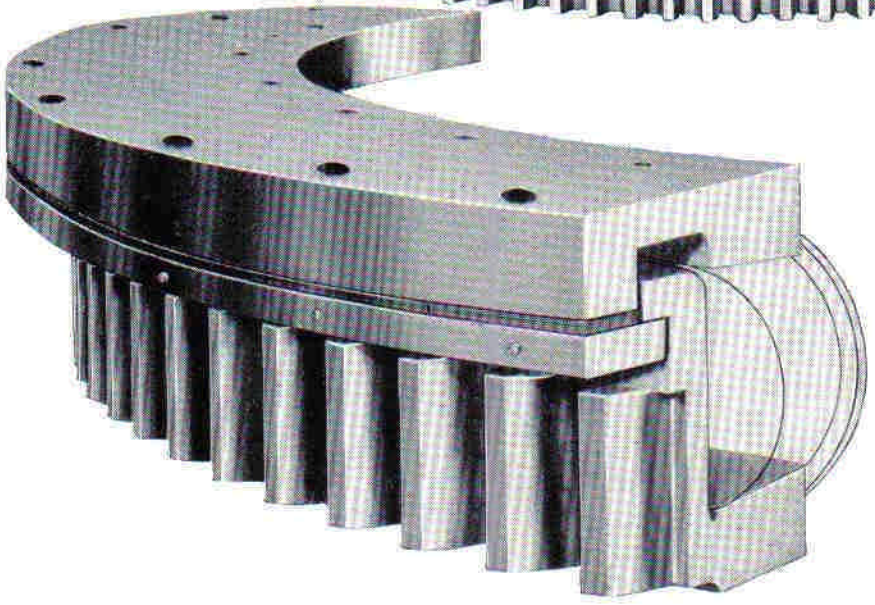

ALL CRANE WEIGHT CARRIED ON ROLLERS

Weight of the upper machinery, boom and load is carried entirely on 27 live rollers, turning between the machined roller paths . . . Actually a huge roller bearing. No weight is carried by axles or roller cage—roller axles serve only for positioning. Rollers and roller paths are fully shielded from dirt and other debris . . . automatically lubricated.

Compact, efficient . . .

MACHINERY DECK

DIESELECTRIC® TRADEMARK

Proper balance and easy access keynote the design of the American upper machinery deck. Expert engineering backed by many years of crane experience spells the difference. All major deck components—main hoist, swing assembly, engine, generator, operator stand—are positioned in a compact, orderly way . . . mounted low and independently of one another . . . yet there is room for efficient routine inspection and maintenance. The American DiesELectric has every possible refinement for safety . . . easy operation . . . higher production.

WELDED, ROLLED STEEL DECK

The entire rotating deck is a single unit, fabricated from heavy rolled steel. Walkways, designed as an integral part of the deck, actually add strength and rigidity. The whole deck is jig drilled and machined after fabrication for perfect machinery alignment.

SHORT TAILSWING

Short, 12 foot tailswing permits work in restricted areas . . . yet without crowding or pyramiding deck machinery . . . another example of superior American design.

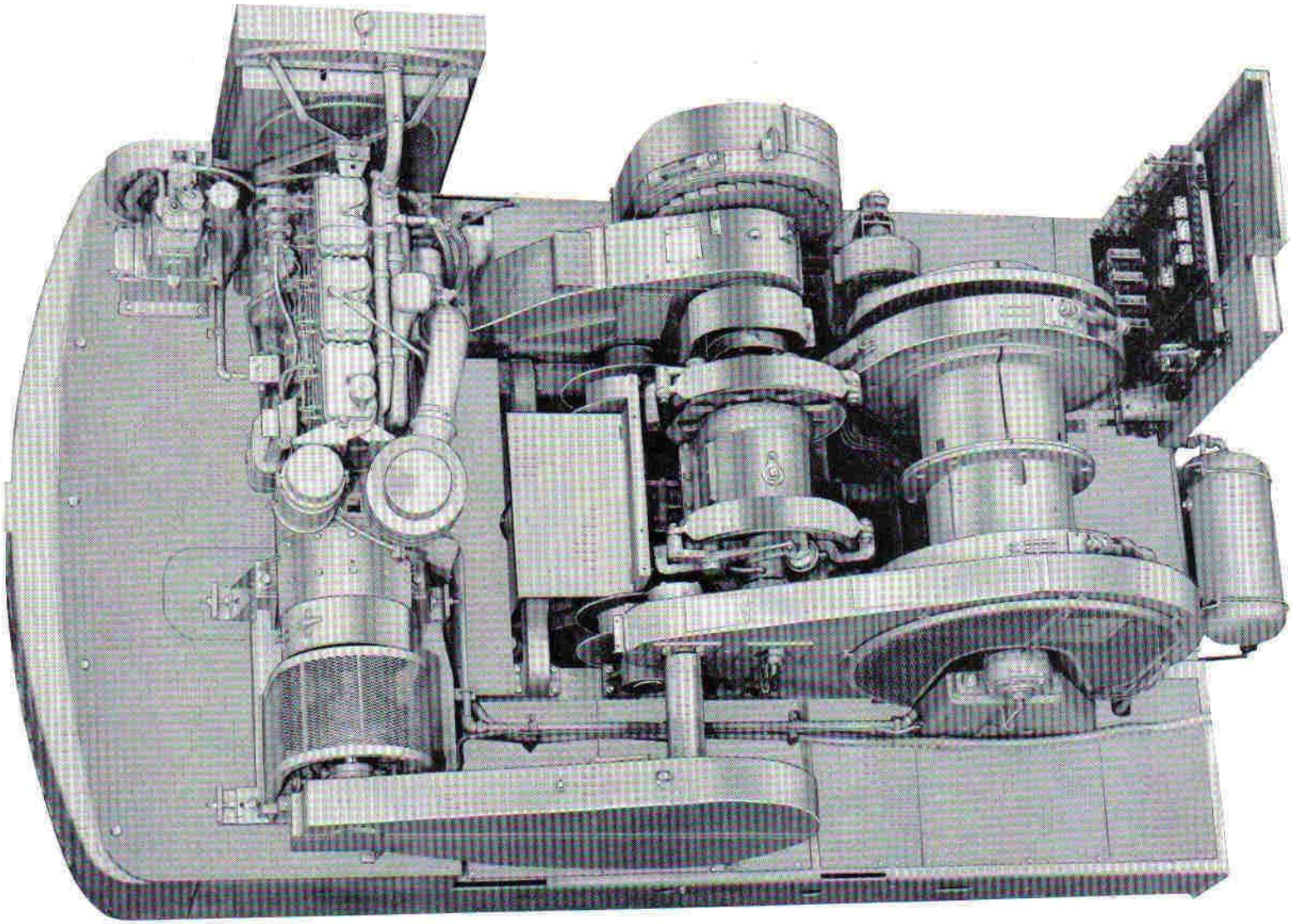

ROOMY DECK—WALKWAY, MAKES ROUTINE INSPECTION EASY

MAIN DRUM ASSEMBLY

You get smooth hoisting control with large, air actuated, tandem band clutches in the American main drum assembly. Short arc tandem design provides automatic equalization of clutch bands . . . eliminates grab and gives operator sensitive feel of the load . . . no adjustments necessary for the life of the bands. Twin drums and alloy steel shaft run freely on anti-friction bearings. The heavy drive gear with machine cut teeth is mounted on the drum shaft with multiple splining . . . carries power load over greater shaft area rather than a single keyed spot.

TANDEM CLUTCHES

Big tandem band contracting type clutches are used in main hoist and swing assemblies. Uniform, short arc engagement gives safer, smoother operation —free of grabbing action . . . actuated by graduated air controls. Bands are easily reversed to get maximum wear from lining.

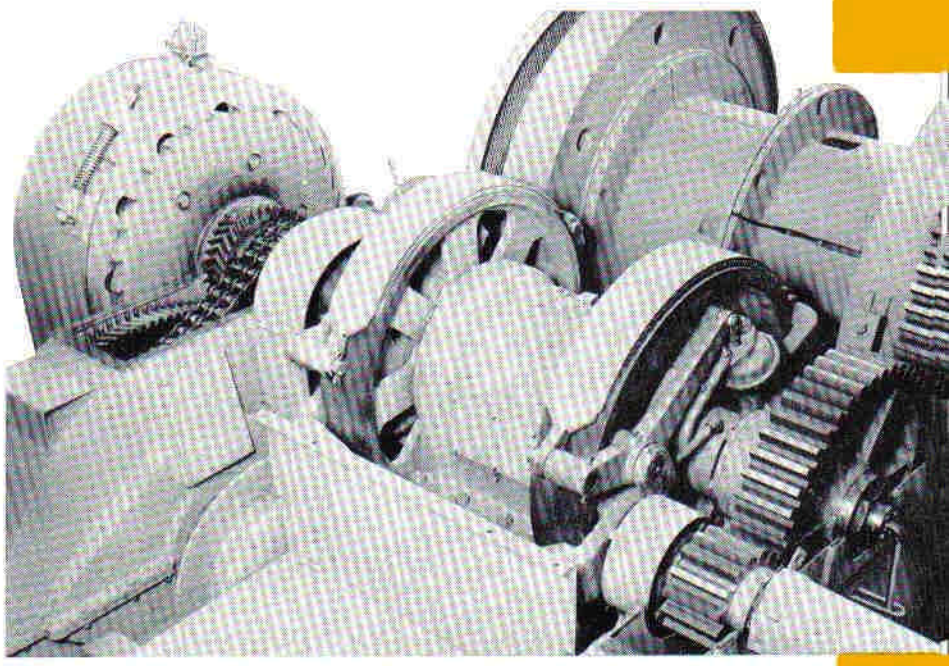

SWING SHAFT ASSEMBLY

The utmost in smoothness and accuracy of control is assured with this big, heavy duty assembly . . . large contracting, tandem band clutches are quick to respond, smooth in operation. Machine cut bevel gears are supported by anti-friction bearings mounted in the cast steel housing . . . assures extreme rigidity and perfect gear mesh. The heat-treated alloy steel shaft, also mounted on anti-friction bearings, takes torque loads only. Bevel gears and their bearings are enclosed and run in oil.

ALL MACHINERY ENCLOSED

Wiring, electrical panel and all gears are enclosed for maximum safety. Operator and personnel can move freely to perform routine maintenance without danger of mishap.

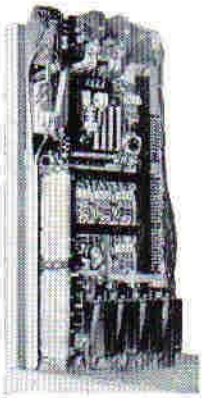

ELECTRIC PANEL

Contactors, resistors, relays, etc. are all panel mounted at left front of the deck, safely isolated from the operator and machinery. Panel is easily accessible for routine checking or servicing.

CONTROLLED BOOM LOWERING

The American, spur gear driven boom hoist, controlled by a contracting band clutch, has all the features required for safe, flexible operation . . . can be used continuously over long periods of time without danger of failure. Boom lowering speed is governed by the speed of the diesel engine through an overrunning clutch arrangement . . . a heavy mechanical brake is an additional safety feature. The American arrangement permits raising or lowering of boom, swing, travel and hoisting all simultaneously, if necessary . . . when working in fixed position, boom can be securely locked with the ratchet dog.

DIESELECTRIC ® TRADEMARK

All in one . . .

POWER UNIT

The complete power package—diesel engine with directly connected generator—is mounted at the rear of the machinery deck, perfectly aligned on a heavy machined steel plate, forming an integral part of the deck. Ample room around engine is provided for quick, routine maintenance.

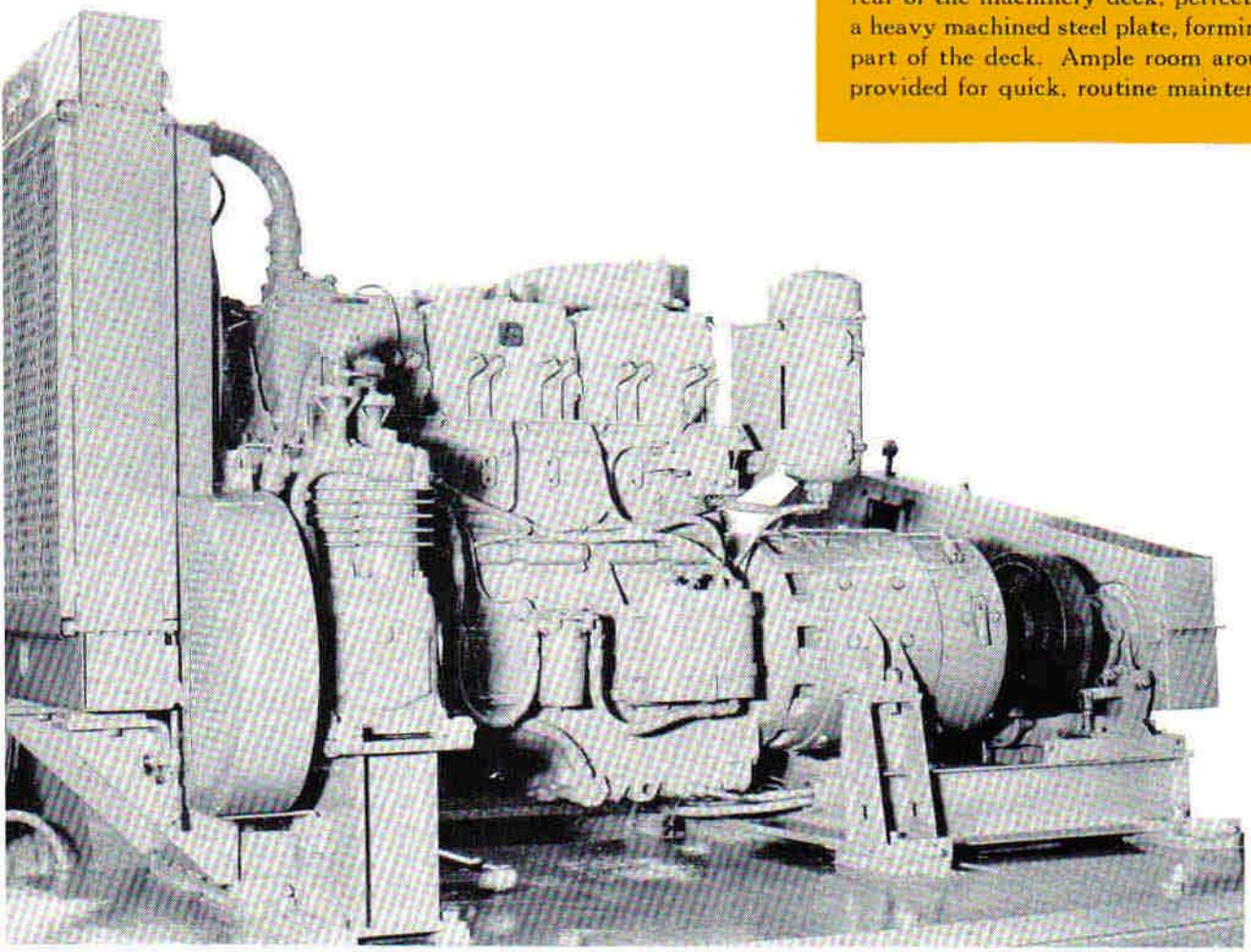

POWER

Diesel engines, complete with starting equipment, batteries, air cleaners, fuel filters and all other accessories are provided on the American DiesELectric Locomotive Crane . . . A complete package with no extras to buy! Several makes are available for customer selection.

GENERATOR

Big—heavy duty—railway type traction generator . . . fully protected and self ventilated, supplies power to the traction motors. It also serves as a starting motor for the diesel engine, and is also designed to power the magnet when the crane is equipped for magnet service . . . No additional generator.

DIESEL POWER TO THE DECK—ELECTRIC POWER TO THE TRUCKS

ADJUSTABLE SEAT

A comfortable, contoured operator's seat is fully adjustable up, down, forward, back and tilt, putting all levers within easy reach of every operator. Seat is foam rubber cushioned with leather cover.

ANTI-FATIGUE AIR CONTROL

∴ Can increase production as much as 20%

FULL VISION CAB—In this cab, completely partitioned from the deck machinery, the operator works in relative quiet and comfort without distraction. He sits high and to the right of the boom, with large safety plate glass windows to let him see his load unobstructed at all times. Side and front windows can be crank lowered for comfortable summer ventilation. Overhead vision assured see cab below . . .

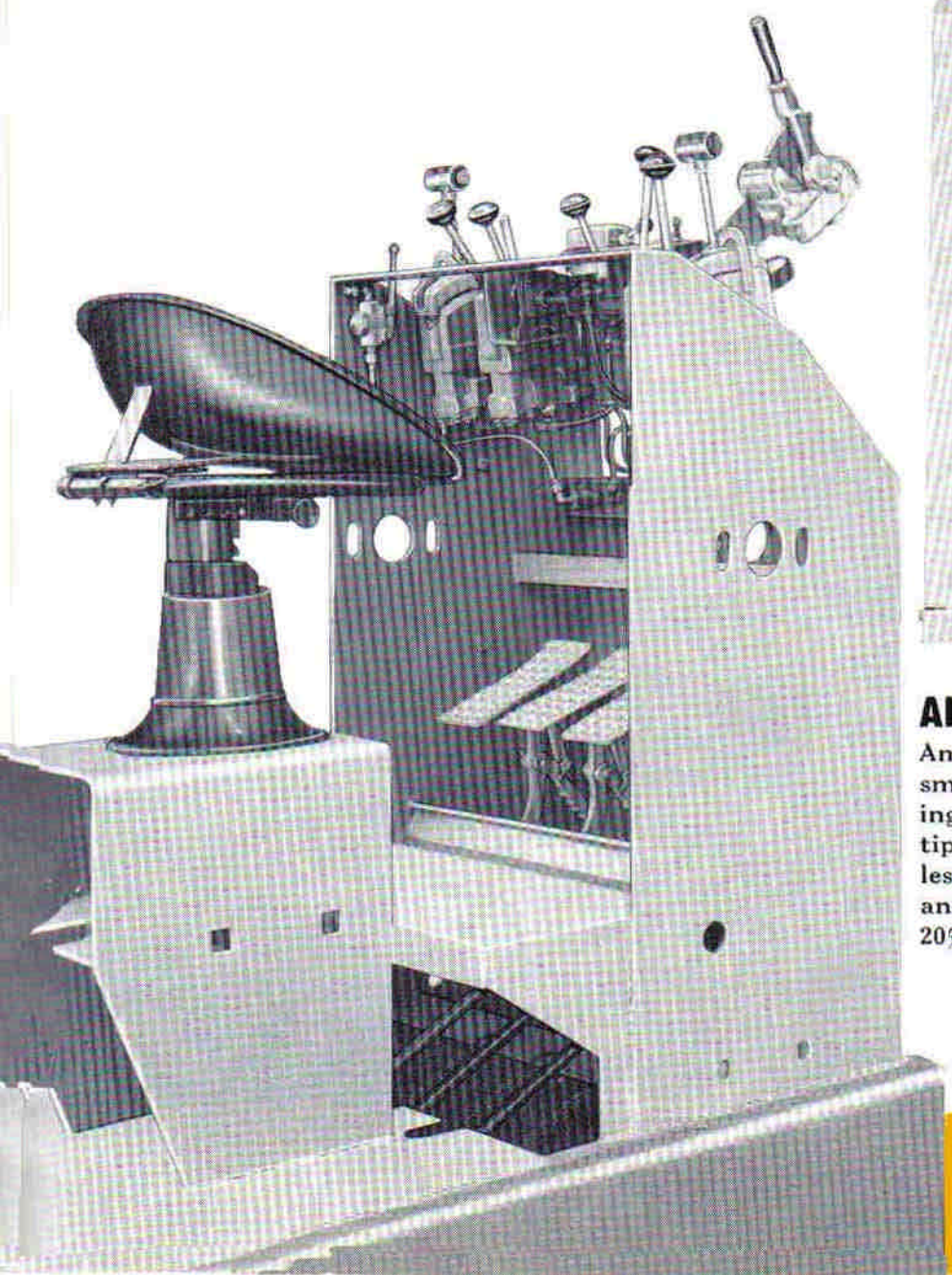

AIR CONTROL

American graduated air controls provide smooth operation, with no initial surging pressures. Levers respond to fingertip pressure assuring maximum effortless efficiency . . . reduces operator fatigue and can increase production as much as 20%.

OPTIONAL FEATURES

DIESELECTRIC® TRADEMARK

ELECTRIC SWINGER

For precision swing control on very heavy lifting jobs, AMERICAN offers an electric swing assembly. Basically it consists of a vertically mounted motor with planetary and spur gear reduction totally enclosed and running in oil. The motor is powered by a separate generator using variable voltage controls—the same type used on large electric shovels—you get smooth swing, precise control with fingertip effort.

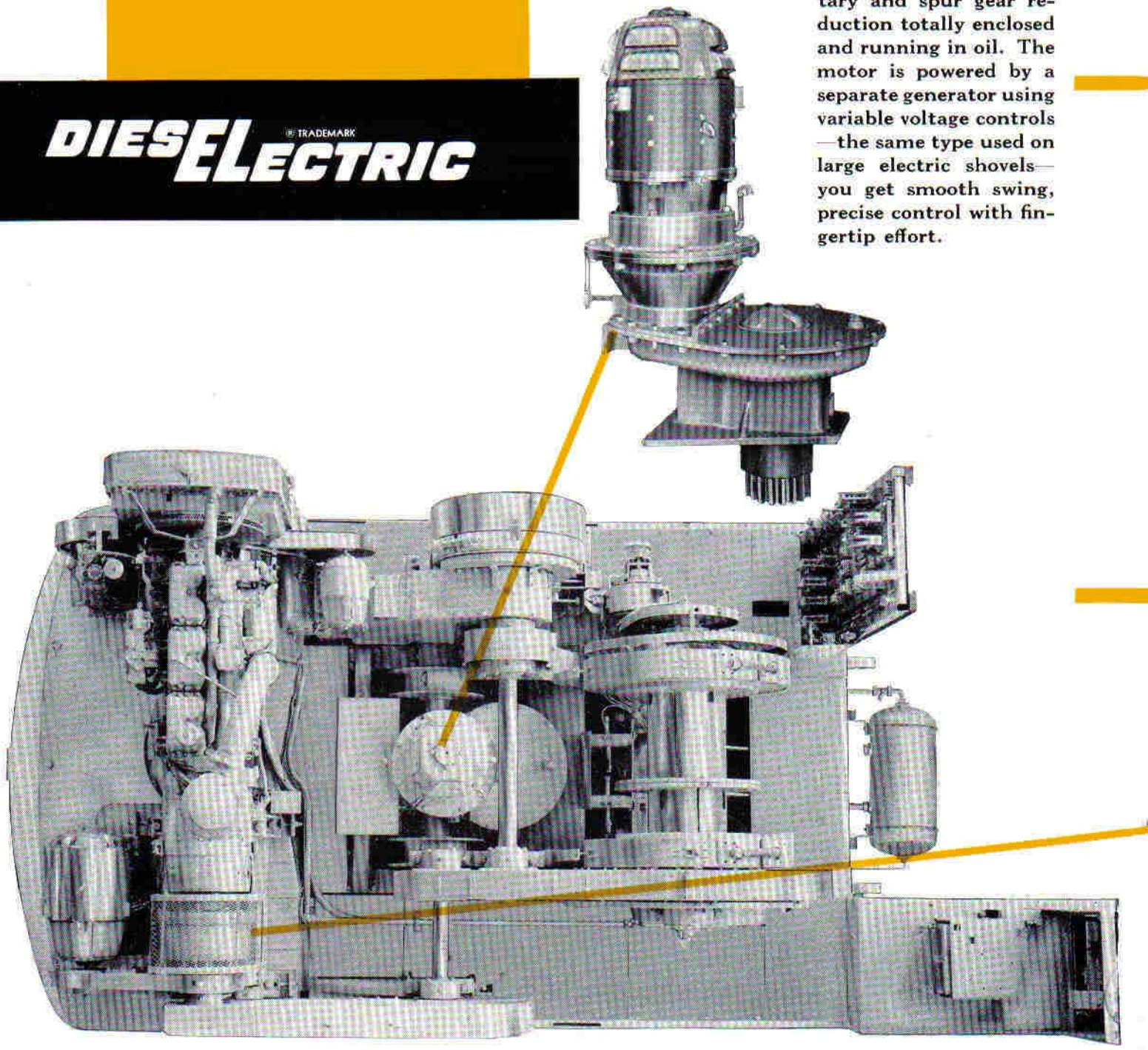

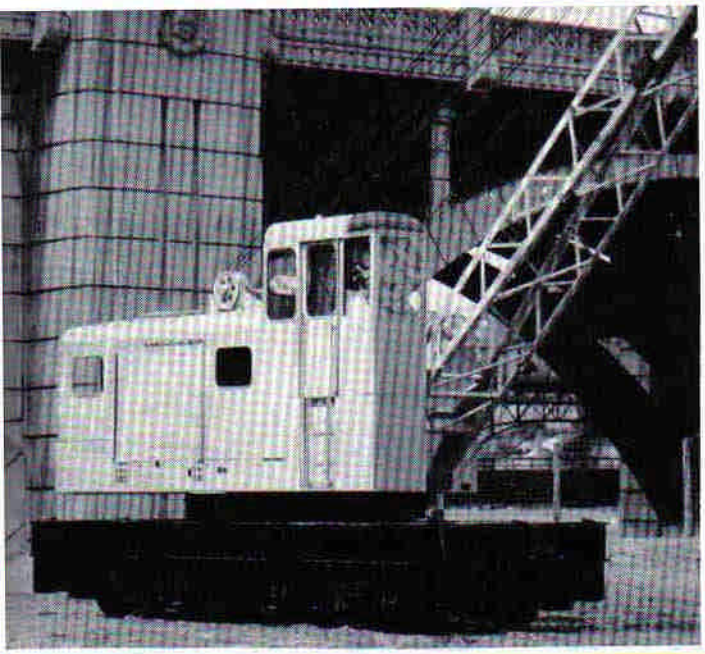

ELEVATED CABS

A better view for stockpiling, unloading or loading gondolas, sorting scrap and similar work is made possible with an elevated cab, offered as an optional feature in 2 ft. and 5 ft. elevations.

DOUBLE TAGLINE WINDER

Two friction type, air controlled tagline winders let the operator actually position bucket or grapple from his seat . . . gives him complete control of positioning, by varying pull required on either tagline.

BLOCKS

Heavy duty crane blocks in capacities from 5 ton through 80 ton are available for American Locomotive Cranes . . . specially designed to provide proper overhauling weight . . . require minimum head room, permitting higher lifts. Available with bronze bushed or anti-friction bearing sheaves.

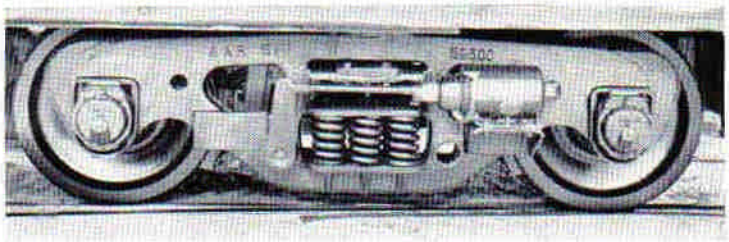

ROLLER JOURNAL BEARINGS

Sealed roller bearings, AAR approved, are offered as an optional extra feature in place of standard journals.

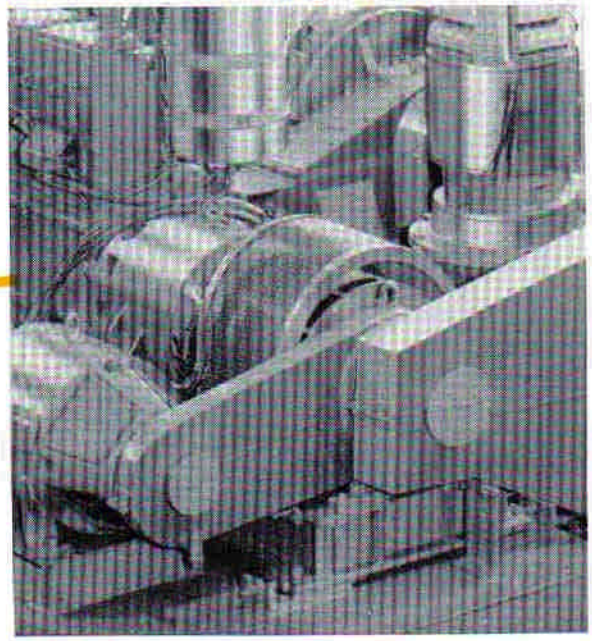

MAGNETIC CLUTCH

For precise "inching" control in hoisting or lowering operations AMERICAN offers a magnetic clutch in place of the standard engine clutch. With this assembly the air-controlled clutch on the hoist drum can be engaged, and loads controlled by varying the torque of the magnetic clutch with a rheostat at the lever stand.

...FAST ...EFFICIENT ...VERSATILE

DIESELECTRIC ® TRADEMARK

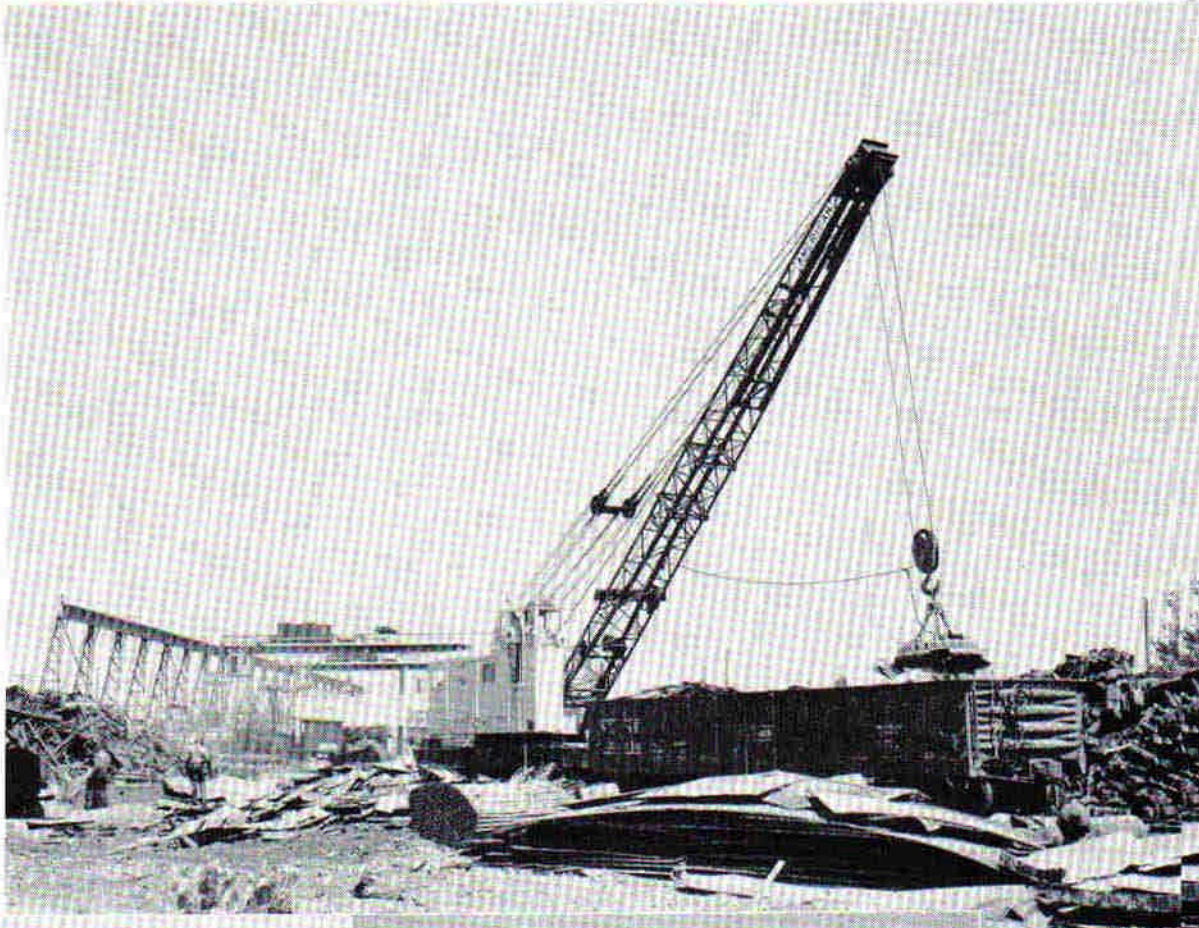

Shorter tail swing lets you stock pile close to tracks . . make better use of your space.

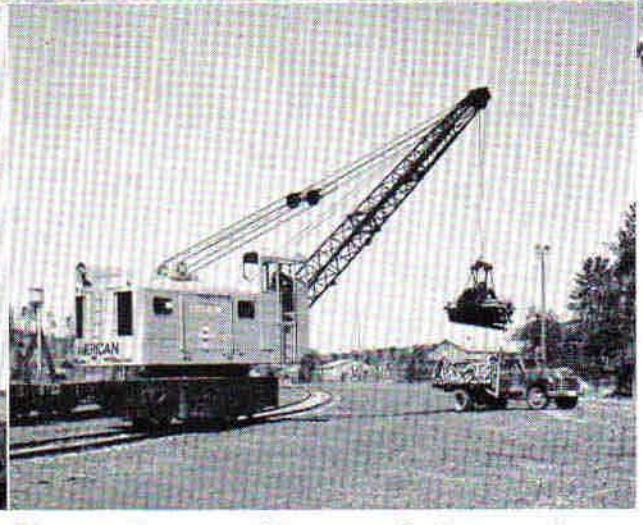

Big capacity means bigger pay loads even when handling the pulpwood grapple.

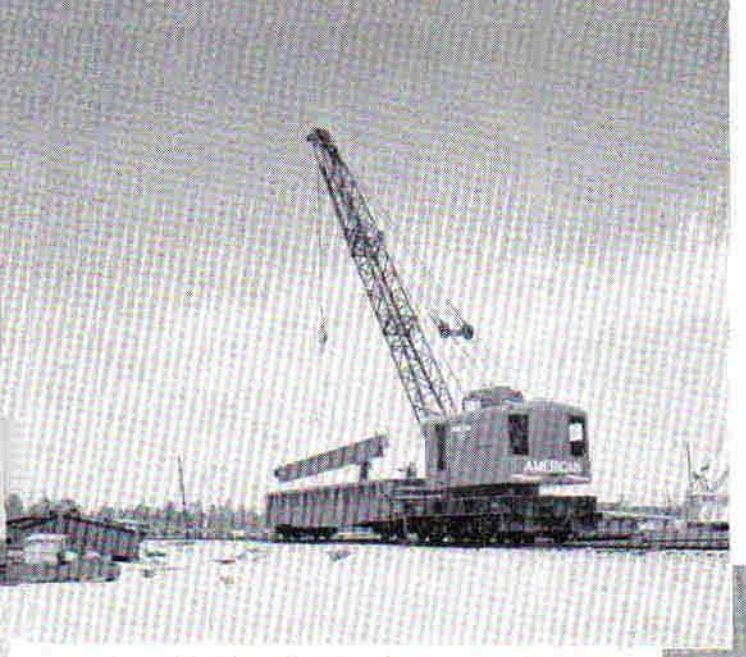

Versatility for switching, loading or unloading, plus pin point accuracy and air controls for steel work.

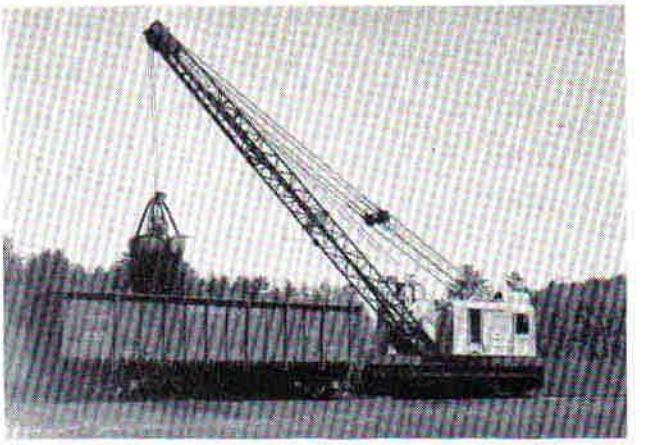

Another elevated cab showing the complete view the operator has to see his work at all times.

Special elevated cab permits unobstructed view into gondola . . . exclusive American "over-excitation" provides extra power to "break" big loads from the pile . . . power is then reduced to hold load for positioning and swinging—a "bonus" feature for bigger production on American!

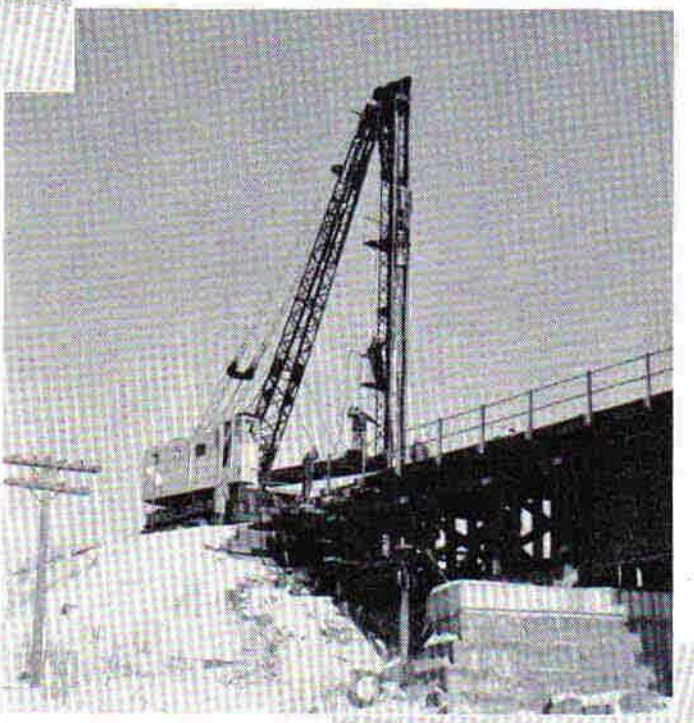

Ideal for pile driving . . . special folding leads provide efficiency, speed and versatility.

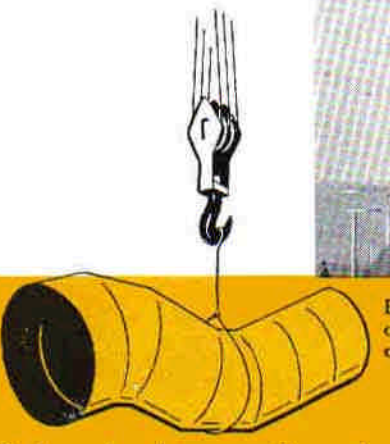

Extremely high elevated cab and special rolling outriggers make this American a real producer on the dock.

Dock work, when capacity and speed mean high production.

MODEL 840-DE LOCOMOTIVE CRANE

AMERICAN

GENERAL SPECIFICATIONS

TRAVEL SPEED AND DRAWBAR PULL

. . . Variable from 22,000 pounds starting drawbar pull at starting speed to 8000 pounds drawbar pull at 4.1 MPH, or maximum speed at 10.4 MPH with no drawbar pull.

SWING SPEED . . . . . $2\frac{1}{2}$ RPM.

HOISTING . . . Rated 17,000 pounds single line pull at 208 feet per minute for clamshell or magnet.

. . . Maximum 21,000 pounds single line pull at 208 feet per minute for hook work.

OPERATING WEIGHT . . . . . 216,000 lbs.

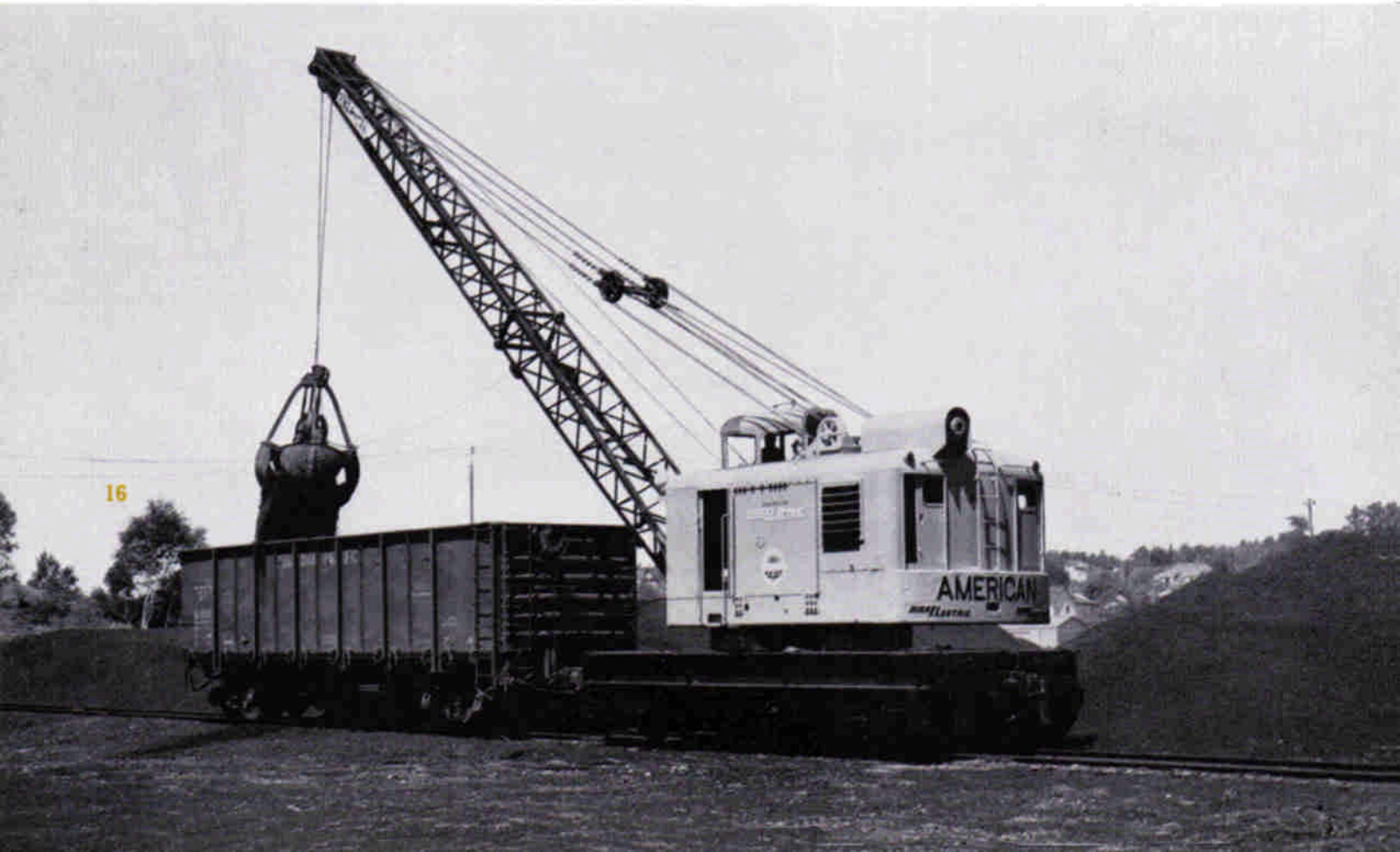

DIESELECTRIC® TRADEMARK

MODEL 840-DE LOCOMOTIVE CRANE

LIFTING CAPACITIES IN POUNDS

BOOM LENGTH IN FEET	WITHOUT OUTRIGGERS — BOOM RADIUS IN FEET																
	12	13	14	15	16	17	18	20	25	30	40	50	60	70	80	90	100
50	80000	74200	67000	60500	57000	53000	49000	42300	32400	26600	18400	13600					
60			66600	60100	56600	52600	48600	41900	32000	26200	18000	13200	10000				
70				59700	56200	52200	48200	41500	31600	25800	17600	12800	9600	7500			
80					55500	51500	47500	40800	30900	25100	16900	12100	8900	6800	5200		
90						51100	47100	40400	30500	24700	16500	11700	8500	6400	4800	3500	
100							46700	44000	30100	24300	16100	11300	8100	6000	4400	3100	2000
	WITH OUTRIGGERS																
50	100000	93500	86500	80000	74500	69500	64300	56000	43000	35500	26000	20000					
60			86000	79500	74000	69000	63800	55400	42500	35000	25400	19400	14600				
70				79000	73400	68300	63200	54800	41900	34500	24900	18800	14000	11300			
80					72700	67600	62500	54000	41100	33700	24100	18000	13200	10500	8100		
90						67100	61900	53500	40600	33200	23700	17400	12600	9900	7500	5700	
100							61400	53000	40000	32700	23100	16800	12000	9300	6900	5100	3700

MODEL
850-80 DE
LOCOMOTIVE CRANE

AMERICAN

GENERAL SPECIFICATIONS

TRAVEL SPEED ..... Up to 10 MPH

SWING SPEED ..... 2 RPM

HOISTING . . . Rated 21,000 lbs. at 200 ft. per minute on 4th layer of rope.

. . . Maximum 160,000 lbs. on 9 part hoist line.

JIB CAPACITY with 50 ft. BOOM . . . 30,000 lbs. at 13 to 30 ft. radius
21,500 lbs. at 40 ft. radius
15,800 lbs. at 50 ft. radius
13,800 lbs. at 55 ft. radius

OPERATING WEIGHT ..... 261,000 lbs

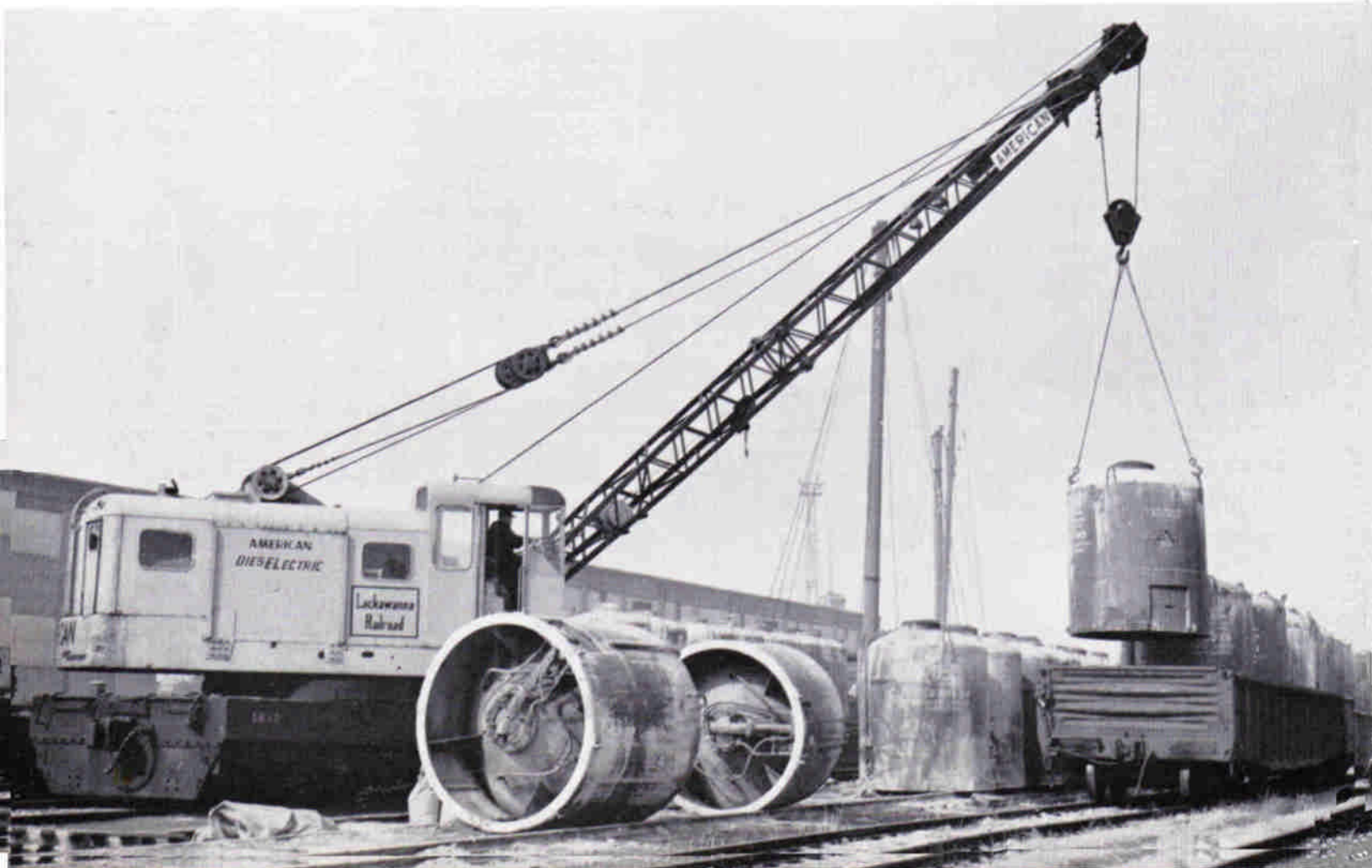

DIESELECTRIC ® TRADEMARK

MODEL 850-80 DE LOCOMOTIVE CRANE

LIFTING CAPACITIES IN POUNDS

BOOM LENGTH IN FEET	WITHOUT OUTRIGGERS — BOOM RADIUS IN FEET																
	12	13	14	15	16	17	18	20	25	30	40	50	60	70	80	90	100
50	100000	90400	81900	75100	69200	64200	59700	52300	39600	31600	21800	16100					
60			81300	74500	68600	63600	59100	51700	39000	31000	21200	15500	11900				
70				73900	68000	63000	58500	51100	38400	30400	20600	14900	11300	8900			
80					67400	62400	57900	50500	37800	29800	20000	14300	10700	8300	6300		
90						61800	57300	49900	37200	29200	19400	13700	10100	7700	5700	4400	
100							56700	49300	36600	28600	18800	13100	9500	7100	5100	3800	2800
	WITH OUTRIGGERS																
50	160000	145000	134000	123000	115000	107000	101000	90000	69000	57000	41000	32000					
60			133000	122000	114000	106000	100000	89000	68000	56000	39900	30800	25000				
70				121000	113000	105000	99000	88000	67000	54900	38700	29600	23700	20000			
80					112000	104000	98000	87000	66000	53800	37600	28400	22400	18600	16000		
90						103000	97000	86000	65000	52600	36500	27200	21200	17300	14500	12400	
100							96000	85000	64000	51500	35300	26000	20000	16000	12900	10700	9000

AMERICAN LOCOMOTIVE CRANES

Built by . . .

AMERICAN HOIST
& DERRICK COMPANY
ST. PAUL, MINNESOTA 55107

MODELS WITH CAPACITIES FROM 25 TON TO 150 TON

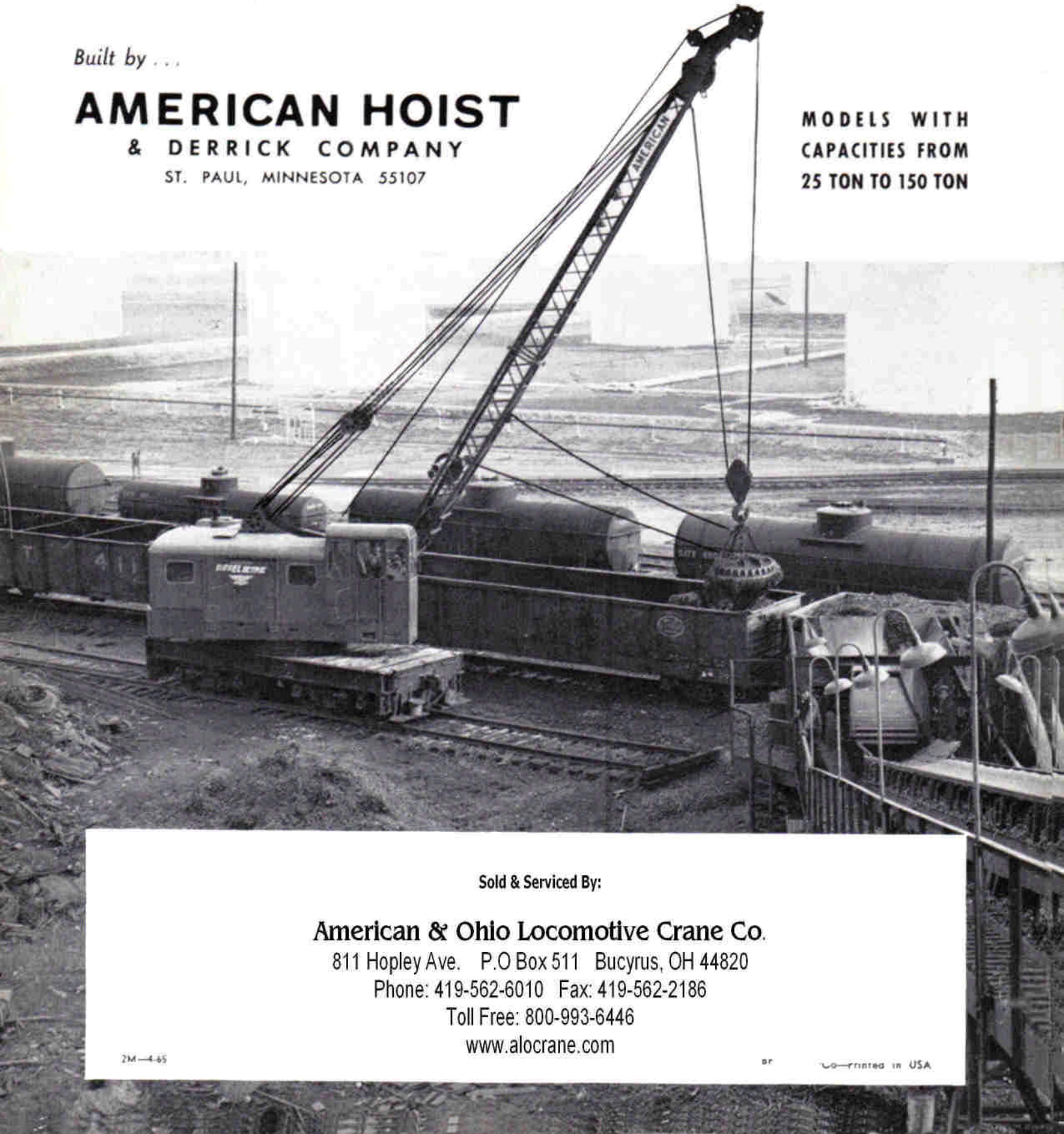

Sold & Serviced By:

American & Ohio Locomotive Crane Co.
811 Hopley Ave. P.O Box 511 Bucyrus, OH 44820
Phone: 419-562-6010 Fax: 419-562-2186
Toll Free: 800-993-6446
www.alocrane.com

2M—4-65

Co—Printed in USA